MICROCYBER

G0307 Modbus to PA Gateway
User Manual

Microcyber Corporation

Caution

1. Please don't take off/install temperature board set at random.
2. Please check if the power of gateway meets the power request in the User Manual.

Version

V1.1

Disclaimer of Liability

We have reviewed the contents of this publication to ensure consistency with the hardware and software described. Since variance cannot be precluded entirely, we cannot guarantee full consistency. However, the information in this publication is reviewed regularly and any necessary corrections are included in subsequent editions.

Microcyber Corporation 2015

The technical data may change at any time.

Table of Contents

Section 1 Overview....1
1.1 Device Types....1
1.2 Structure....2
1.2.1 Dimension....2
1.2.2 Structure....2
Section 2 Installation....3
2.1 DIN Rail Installation....3
2.2 Gateway Interface....3
2.2.1 Modbus Power Interface....3
2.2.2 Modbus-RS485 Interface (For GW-MODB-PA-RS485)....3
2.2.3 Modbus-RS232 Interface (For GW-MODB-PA-RS232)....4
2.2.4 PROFIBUS PA Bus Interface....4
2.2.5 PROFIBUS Address Setting Interface....4
2.2.6 LED Indication Light....5
2.2.7 Special Function Interface....5
Section 3 Working Principle....6
Section 4 Gateway Configuration....7
4.1 Topology Connection....7
4.2 Function Block Introduction....7
4.3 Modbus Transducer Block Parameter....8
4.3.1 Modbus Transducer Block Communication Parameters....12
4.3.2 Modbus Transducer Block Error Check Parameters....13
4.3.3 Modbus Transducer Block Input Output Parameters....14
4.3.4 Modbus Transducer Block Register Parameters....16
4.4 Set Gateway Address....21
4.4.1 Software Setting Address....21
4.4.2 Hardware Setting Address....21
4.5 Modbus Setting Example....21
4.5.1 Modbus Communication Parameter Setting....21
4.5.2 Modbus Register Parameter Setting....22
4.6 Gateway Periodic Configuration....23
4.6.1 GSD File Introduction....23
4.6.2 Install GSD File....25
4.6.3 Use GSD File....26
4.6.4 Specification GSD File....28
Section 5 Maintenance....29
Section 6 Technical Specification....31

6.1 Basic Parameter.....31
6.2 Performance Index.....31
6.3 Physical Characteristic.....31
6.4 Default Communication Parameter.....31
6.5 Supportive Modbus Function Code.....31
Appendix G0307 Modbus to PA Gateway Selection.....32

Table of Tables

Table 1 Modbus Transducer Block Parameters..... 8
Table 2 Modbus Transducer Block Communication Parameter Description..... 12
Table 3 BAD_STATUS Parameter Description..... 13
Table 4 ERR_LOOK_SEL Parameter Description..... 13
Table 5 ERR_LOOK_RESULT Parameter Description..... 14
Table 6 Input Output Parameter Description..... 14
Table 7 101&102 Data Type..... 15
Table 8 Input Output Configuration Parameter Description..... 16
Table 9 DS-256 Data Member Description..... 17
Table 10 DATA_TYPE Parameter Description..... 17
Table 11 Parameter Quality Status and REGISTER_ADR_OF_STATUS..... 19
Table 12 DS-257 Data Member Description..... 20
Table 13 FUNCTION_CODE Parameter Description..... 20
Table 14 GSD Module..... 24
Table 15 GSD Input Output Data Configuration List..... 25
Table 16 LED Light Status..... 29

Table of Figures

Figure 1 G0307 Modbus to PA Gateway..... 1
Figure 2 Dimension (112*70*50, Unit: mm)..... 2
Figure 3 Structure..... 2
Figure 4 DIN Rail Installation..... 3
Figure 5 Gateway System Connection..... 6
Figure 6 Gateway Principle..... 6
Figure 7 PROFIBUS PA Network Topology..... 7
Figure 8 PROFIBUS PA Bus Connection..... 7
Figure 9 Modbus Communication Parameter Setting..... 22
Figure 10 Modbus Analog Input 1 Register Parameter Setting..... 23
Figure 11 GSD File Window..... 26
Figure 12 Successful Installation..... 26
Figure 13 Correct Installed Devices..... 27
Figure 14 Device Prosperities Configuration..... 27
Figure 15 Device Configuration..... 28

Section 1 Overview

Product Name：Modbus to PA Gateway

Product Model: G0307

The product realizes the converter function from Modbus RTU to PROFIBUS PA, and it shall multiple devices with Modbus RTU protocol to PROFIBUS PA network.

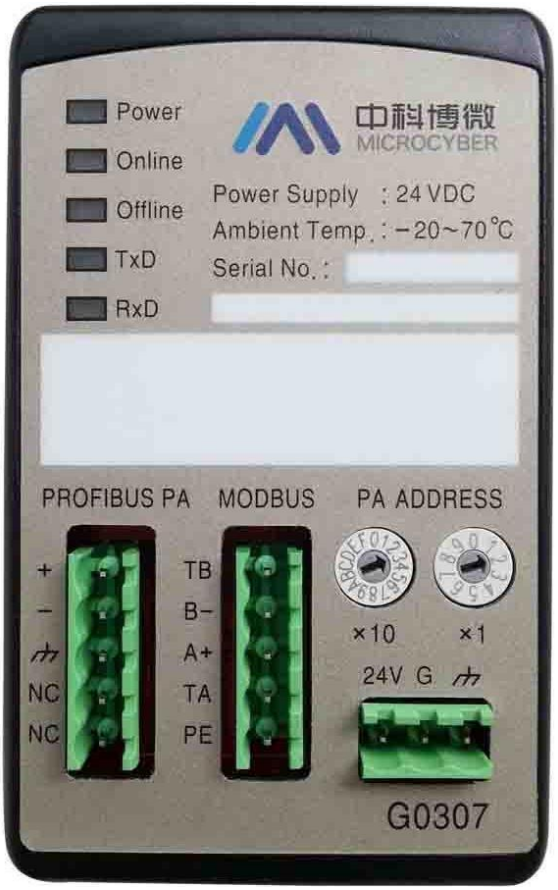

Figure 1 G0307 Modbus to PA Gateway

1.1 Device Types

According to Modbus interface, the gateway shall have 2 models:

Product Model	Modbus Interface
GW-MODB-PA-RS485	RS485
GW-MODB-PA -RS232	RS232

Note:

1) It only realizes GW-MODB-PA-RS485 in V1.0, and GW-MODB-PA-RS232 shall be realized later on.

1.2 Structure

1.2.1 Dimension

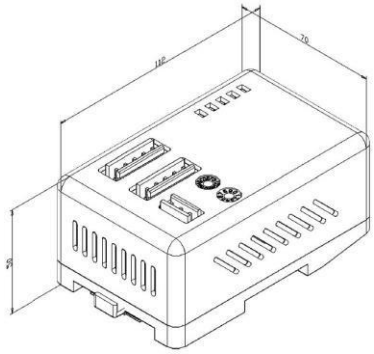

Figure 2 Dimension (112*70*50, Unit: mm)

1.2.2 Structure

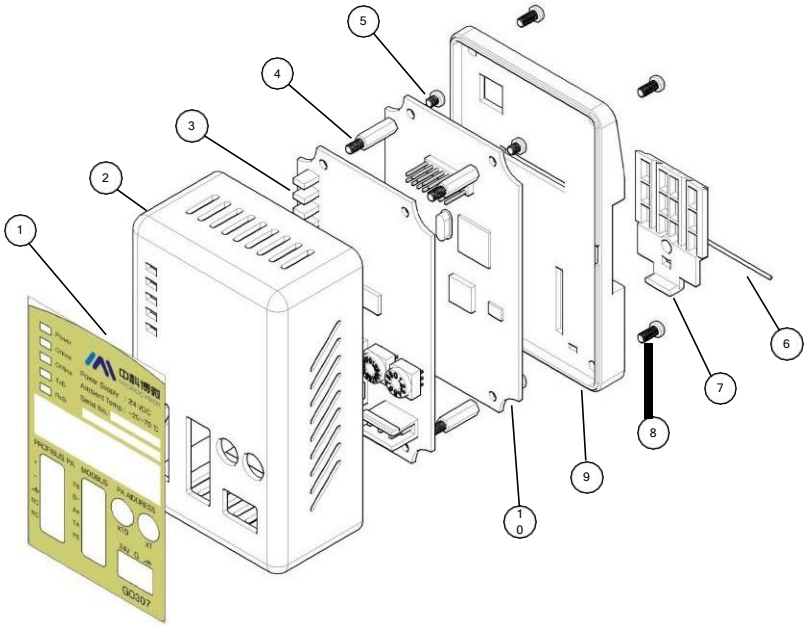

Figure 3 Structure

1	Pasting	2	Upper Cover	3	Interface Board	4	Hexagonal Prisms
5	Wide Edge Screw	6	Iron Wire	7	Clip	8	Wide Edge Screw
9	Base	10	Communication Board				

Section 2 Installation

2.1 DIN Rail Installation

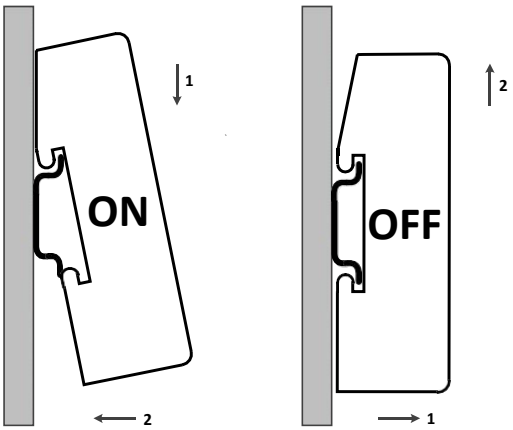

Figure 4 DIN Rail Installation

2.2 Gateway Interface

2.2.1 Modbus Power Interface

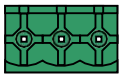

No.	Terminal Name	Usage
1	24V	Connect 24VDC +
2	G	Connect 24VDC -
3	PE	Connect twisted-pair shield

2.2.2 Modbus-RS485 Interface (For GW-MODB-PA-RS485)

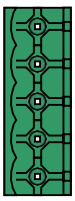

No.	Terminal Name	Usage
1	TB	Connect short circuit with B- enabled end
2	B-	Connect Modbus bus B
3	A+	Connect Modbus bus A
4	TA	Connect short circuit with A+ enabled end
5	PE	Connect twisted-pair shield

2.2.3 Modbus-RS232 Interface (For GW-MODB-PA-RS232)

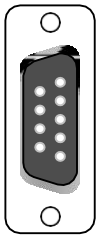

No.	Terminal Name	Usage
1	NC	Vacant
2	TxD	Connect user device RxD
3	RxD	Connect user device TxD
4	NC	Vacant
5	GND	Connect user device GND
6-9	NC	Vacant

Note: The user shall make RS232 cable according to interface definition.

2.2.4 PROFIBUS PA Bus Interface

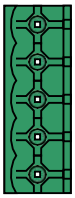

No.	Terminal Name	Usage
1	+	Connect PROFIBUS PA Bus +
2	-	Connect PROFIBUS PA Bus -
3	⏚	Connect PROFIBUS PA shield wire
4	NC	Vacant
5	NC	Vacant

2.2.5 PROFIBUS Address Setting Interface

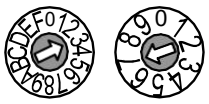

Address DIP Switch	Description
16-bit rotary DIP switch x10	Each scale represents 10, range 0~160.
10-bit rotary DIP switch x1	Each scale represents 1, range 0~9.

Note: The function is effective only when address enabled switch is ON. When the address is beyond 125, the fixed address is 125.

Shown as the figure, Address=3*10+7*1=37.

2.2.6 LED Indication Light

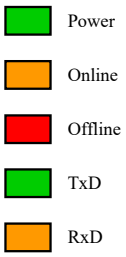

Indication Light Name	Color	Usage
Power	Green	Modbus power indication light
Online	Yellow	PROFIBUS enter data exchange
Offline	Red	PROFIBUS not enter data exchange
TxD	Green	Modbus sending indication light
RxD	Yellow	Modbus receiving indication light

2.2.7 Special Function Interface

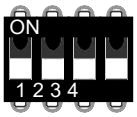

No.	Terminal Name	Usage
1	RST	Reset switch. ON: Reset the device, the device shall return to default value. Please set as OFF after using.
2	WP	Hardware write protection switch ON: Enabled; OFF: Forbidden.
3	SIM	No Usage.
4	ADDR_EN	Address enabled switch. ON: Use gateway panel to set address; OFF: Use Set Address command to set address.

Section 3 Working Principle

G0307 Modbus to PA gateway is a device supporting Modbus RTU protocol and PROFIBUS PA protocol. As the PROFIBUS PA slave device, it can make 4 Modbus slave devices connect to PROFIBUS PA network.

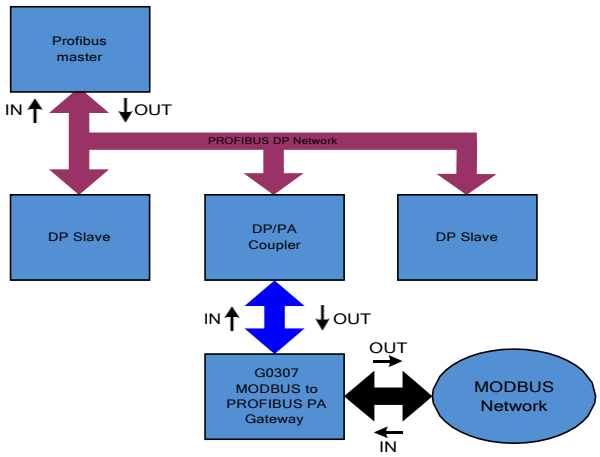

Figure 5 Gateway System Connection

G0307 Modbus to PA gateway includes 1 physical block, 16 function blocks and 1 Modbus transducer block. Modbus transducer block includes 4 AIs, 4 AOs, 4 DIs and 4 DOs. The data (Modbus device data) can establish connection with function blocks via channels to realize protocol convert function.

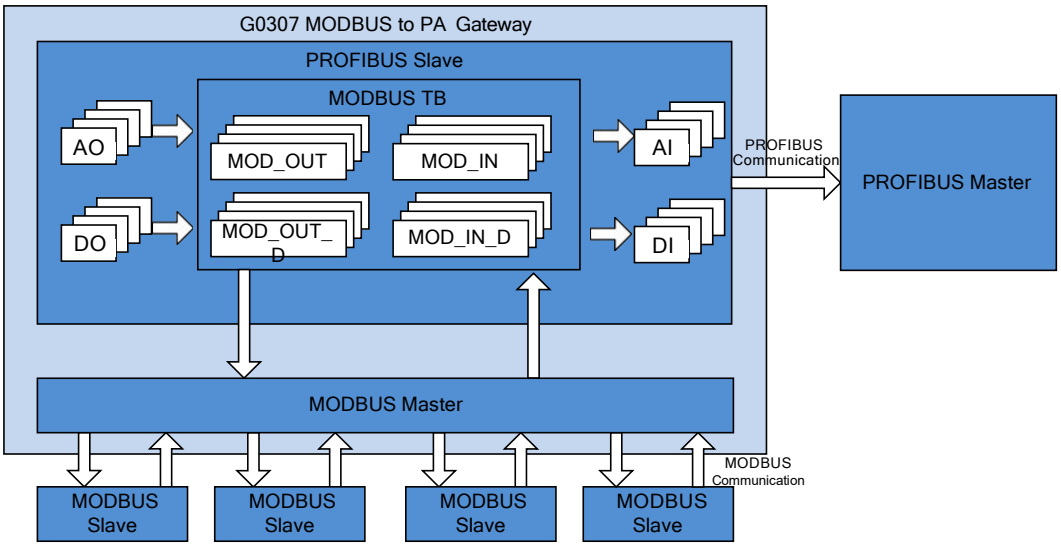

Figure 6 Gateway Principle

As Modbus master, G0307 Modbus to PA gateway shall do the communication with Modbus slave, and exchange Modbus transducer block parameter data and function block, so that it connect Modbus slave to PROFIBUS system.

Section 4 Gateway Configuration

4.1 Topology Connection

A PROFIBUS PA network topology supports multiple network topology connections, shown as Figure 7. The PA device bus connection is shown in Figure 8, the bus ends is connected with terminal matched resistance to ensure signal quality. The maximum length is 1900m, it shall be prolonged to 10km with repeaters.

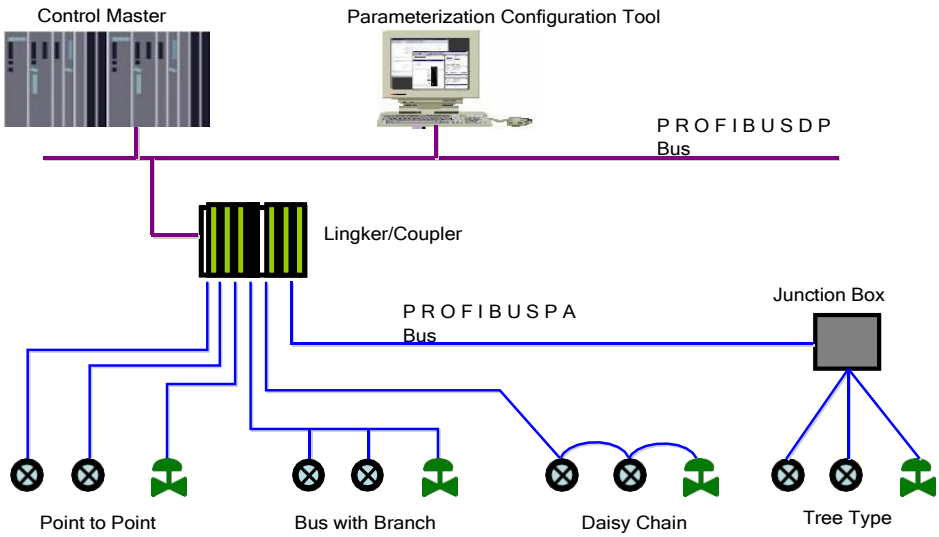

Figure 7 PROFIBUS PA Network Topology

Figure 8 PROFIBUS PA Bus Connection

4.2 Function Block Introduction

G0307 Modbus to PA gateway includes 1 physical block, 4 AI function blocks, 4 AO function blocks, 4 DI function blocks and 4 DO function blocks. Each AI, AO, DI, DO has 4

channels, indicating 4 AIs, 4 AOs, 4 DIs and 4DOs.

Function Block Name	Function Block Description
Physical Block	PB describes device's specific hardware information and identify and diagnosis information, including device tag number, software revision, hard ware revision, installation date, etc.
Modbus Transducer Block	Via Modbus transducer block, the user shall configure Modbus communication parameters, such as baud rate, stop bit, communication overtime, etc.
Analog Input Block	Via internal channel, the user shall achieve analogy processing value from transducer block from Modbus slave and process it, and provide appropriate measurement value to master device via bus communication.
Analog Output Block	It is used to transfer master's output data to transducer block via internal channel and effect on Modbus slave.
Discrete Input Block	Via internal channel, the user shall achieve input data from transducer block from Modbus slave, and provide it to master device via bus communication.
Discrete Output Block	It is used to transfer master's discrete output data to transducer block via internal channel and effect on Modbus slave.

4.3 Modbus Transducer Block Parameter

The following list describes all the Modbus transducer block parameters.

Table 1 Modbus Transducer Block Parameters

Index	Parameter Name	Data Type	Effective Range	Default Value	Save Mode	Function Description
1	ST_REV	Unsigned16		0	S/RO	Static revision
2	TAG_DESC	OctString(32)		Spaces	S	Tag number
3	STRATEGY	Unsigned16		0	S	Strategy
4	ALERT_KEY	Unsigned8	1 to 255	0	S	Alarm
5	TARGET_MODE	Unsigned8		AUTO	S	Target mode

6	MODE_BLK	DS-37			D	Current mode
7	ALARM_SUM	DS-42			D	Alarm summary
13	BAUD_RATE	Unsigned8	0-4	2	S	Modbus communication baud rate 0:2400, 1:4800, 2:9600, 3:14400, 4:19200
14	STOP_BITS	Unsigned8	0-1	0	S	Modbus communication stop bit 0: 1bit, 1: 2bit
15	PARITY	Unsigned8	0-2	0	S	Modbus communication parity bit 0: None, 1: Even, 2: Odd
16	CRC_ORDER	Unsigned8	0-1	0	S	CRC high-low byte swap, high byte appears ahead by default 0:No swap, 1:Swap
17	TIME_OUT	Unsigned16		300	S	After sending Modbus request, the maximum time waiting for slave station response. The unit is ms, default 300ms.
18	NUMBER_OF_RETRY	Unsigned8	0-255	1	S	When the waiting response is timeout, the number of resending the request.
19	SLVAE_ADDRESS	Unsigned8	0-255	1, 2, 3, 4	S	Including most supportive 4 Modbus slave station addresses

20	BAD_STATUS	Bit string(4)			D/RO	Communication status for 32 input output commands. When certain bit is 1, it means the related command doesn't receive the response. Please refer to the following table for the parameter description.
21	EXP_CODE_NUMBER	Unsigned8	0-31	0	D	Code index address of 32 input output negative response in abnormal. E.g. 0 represents the negative response code of MOD_IN1.
22	EXP_CODE_VALUE	Unsigned8	0-255	0	D/RO	Abnormal code of 32 input output command negative response, which is indicated by EXP_CODE_NUMBER index
23	MOD_IN1	101			D/RO	Analog input 1
24	SCALE_LOC_IN1	DS-256			S	Analog input 1 configuration
25	MOD_IN2	101			D/RO	Analog input 2
26	SCALE_LOC_IN2	DS-256			S	Analog input 2 configuration
27	MOD_IN3	101			D/RO	Analog input 3
28	SCALE_LOC_IN3	DS-256			S	Analog input 3 configuration

29	MOD_IN4	101			D/RO	Analog input 4
30	SCALE_LOC_IN4	DS-256			S	Analog input 4 configuration
31	MOD_OUT1	101			D/RO	Analog output 1
32	SCALE_LOC_OUT1	DS-256			S	Analog output 1 configuration
33	MOD_ OUT2	101			D/RO	Analog output 2
34	SCALE_LOC_OUT2	DS-256			S	Analog output 2 configuration
35	MOD_ OUT3	101			D/RO	Analog output 3
36	SCALE_LOC_OUT3	DS-256			S	Analog output 3 configuration
37	MOD_ OUT4	101			D/RO	Analog output 4
38	SCALE_LOC_OUT4	DS-256			S	Analog output 4 configuration
39	MOD_IN_D1	102			D/RO	Discrete input 1
40	LOC_IN_D1	DS-257			S	Discrete input 1 configuration
41	MOD_IN_D2	102			D/RO	Discrete input 2
42	LOC_IN_D2	DS-257			S	Discrete input 2 configuration
43	MOD_IN_D3	102			D/RO	Discrete input 3
44	LOC_IN_D3	DS-257			S	Discrete input 3 configuration
45	MOD_IN_D4	102			D/RO	Discrete input 4
46	LOC_IN_D4	DS-257			S	Discrete input 4 configuration
47	MOD_OUT_D1	102			D/R	Discrete output 1

					O	
48	LOC_ OUT _D1	DS-257			S	Discrete output 1 configuration
49	MOD_OUT_D2	102			D/RO	Discrete output 2
50	LOC_OUT_D2	DS-257			S	Discrete output 2 configuration
51	MOD_OUT_D3	102			D/RO	Discrete output 3
52	LOC_OUT_D3	DS-257			S	Discrete output 3 configuration
53	MOD_OUT_D4	102			D/RO	Discrete output 4
54	LOC_OUT_D4	DS-257			S	Discrete output 4 configuration

Index 1-7 are standard parameters, so there isn't detailed description. Other parameters will be described detailed in following.

4.3.1 Modbus Transducer Block Communication Parameters

Via transducer blocks, Modbus communication parameter can be configured, such as baud rate, stop bit, communication overtime, etc. MODBUS communication configuration parameter descriptions are shown as below.

Table 2 Modbus Transducer Block Communication Parameter Description

Index	Parameter Name	Function Description
13	BAUD_RATE	Baud rate, 0: 2400, 1: 4800, 2: 9600 (default), 3: 14400, 4: 19200
14	STOP_BIT	Stop bit, 0: 1 stop bit, 1: 2 stop bits
15	PARITY	Parity bit, 0: no parity bit, 1: even parity check, 2: odd parity check
16	CRC_ORDER	CRC check byte order, 0: high byte is ahead,1: low byte is ahead
17	TIME_OUT	After sending MODBUS request, the maximum time waiting for slave station response. The unit is ms, default 300ms.
18	NUMBER_OF_RETRY	When the waiting response is timeout, the number of

		resending the request, range 0-255
19	SLAVE_ADDRESS	Including most supportive 4 Modbus slave station addresses, and the address can be the same, range 0-255.

4.3.2 Modbus Transducer Block Error Check Parameters

4.3.2.1 BAD_STATUS Parameters

Index 20.If communication fails, the related bit shall be set as 1. Otherwise, it is 0.

Table 3 BAD_STATUS Parameter Description

Bit	Description	Bit	Description
0	MOD_IN1	16	MOD_IN_D1
1	MOD_IN2	17	MOD_IN_D2
2	MOD_IN3	18	MOD_IN_D3
3	MOD_IN4	19	MOD_IN_D4
4-7	N/A	20-23	N/A
8	MOD_OUT1	24	MOD_OUT_D1
9	MOD_ OUT2	25	MOD_ OUT_D2
10	MOD_ OUT3	26	MOD_ OUT_D3
11	MOD_ OUT4	27	MOD_ OUT_D4
12-15	N/A	28-31	N/A

4.3.2.2 ERR_LOOK_SEL and ERR_LOOK_RESULT Parameters

ERR_LOOK_SEL (Index 21) and ERR_LOOK_RESULT (Index 22), are data check functions for input output parameter negative response. User is able to check about every input output response value, using ERR_LOOK_SEL to check a certain input output parameter, reading ERR_LOOK_RESULT parameter will receive the communication response data of this parameter. ERR_LOOK_RESULT, 0 means there is no failure. 0x01 – 0x0B is standard negative data, and 0xPA means slave station communication is in failure.

The detailed parameter description for the two parameters is shown as following:

Table 4 ERR_LOOK_SEL Parameter Description

Data	Description	Data	Description
0	MOD_IN1	8	MOD_IN_D1
1	MOD_IN2	9	MOD_IN_D 2
2	MOD_IN3	10	MOD_IN_D 3
3	MOD_IN4	11	MOD_IN_D 4

4	MOD_OUT1	12	MOD_OUT_D1
5	MOD_ OUT2	13	MOD_ OUT_D2
6	MOD_ OUT3	14	MOD_ OUT_D3
7	MOD_ OUT4	15	MOD_ OUT_D4

Table 5 ERR_LOOK_RESULT Parameter Description

Responding Code	Description
0x00	Ok
0x01	Illegal Function
0x02	Illegal Data Address
0x03	Illegal Data Value
0x04	Slave Device Failure
0x05	Acknowledge
0x06	Slave Device Busy
0x08	Memory Parity Error
0x0A	Gateway Path Unavailable
0x0B	Gateway Target Device Failed To Response
0xFD	Data Type Mismatch
0xFE	Function Code Mismatch
0xFF	Communication Failure

4.3.3 Modbus Transducer Block Input Output Parameters

MODBUS transducer blocks provide 4 analog inputs, 4 analog outputs, 4 discrete inputs and 4 discrete outputs.

Table 6 Input Output Parameter Description

Index	Name	Data Type	Description
23	MOD_IN1	101	Analog input, to transfer the value and status collected from MODBUS slave station to AI function block 1
25	MOD_IN2	101	Analog input, to transfer the value and status collected from MODBUS slave station to AI function block 2
27	MOD_IN3	101	Analog input, to transfer the value and status collected from MODBUS slave station to AI function block 3
29	MOD_IN4	101	Analog input, to transfer the value and status collected from MODBUS slave station to AI function block 4
31	MOD_OUT1	101	Analog output, to transfer the set value and status

			collected from AO function block 1 to MODBUS slave station
33	MOD_OUT2	101	Analog output, to transfer the set value and status collected from AO function block 2 to MODBUS slave station
35	MOD_OUT3	101	Analog output, to transfer the set value and status collected from AO function block 3 to MODBUS slave station
37	MOD_OUT4	101	Analog output, to transfer the set value and status collected from AO function block 4 to MODBUS slave station
39	MOD_IN_D1	102	Analog input, to transfer the value and status collected from MODBUS slave station to DI function block 1
41	MOD_IN_D2	102	Analog input is to transfer the value and status collected from MODBUS slave station to DI function block 2
43	MOD_IN_D3	102	Analog input is to transfer the value and status collected from MODBUS slave station to DI function block 3
45	MOD_IN_D4	102	Analog input is to transfer the value and status collected from MODBUS slave station to DI function block 4
47	MOD_OUT_D1	102	Analog input is to transfer the set value and status collected from DO function block 1 to MODBUS slave station
49	MOD_OUT_D2	102	Analog output is to transfer the set value and status collected from DO function block 2 to MODBUS slave station
51	MOD_OUT_D3	102	Analog output is to transfer the set value and status collected from DO function block 3 to MODBUS slave station
53	MOD_OUT_D4	102	Analog output is to transfer the set value and status collected from DO function block 4 to MODBUS slave station

Table 7 101&102 Data Type

Data Type	Data Member	Data Member Type	Description
101	VALUE	Float	Floating point value.

	STATUS	Unsigned8	Including quality and status.
102	VALUE	Unsigned8	Discrete value.
	STATUS	Unsigned8	Including quality and status.

4.3.4 Modbus Transducer Block Register Parameters

MODBUS transducer block provides 4 analog inputs and 4 analog outputs, 4 discrete inputs and 4 discrete magnitude outputs, which can be connected to certain Modbus register for data exchange according to specific data type. Modbus register configuration parameter is divided into analog input output configuration parameter and discrete input output configuration parameter. What's more, compared with discrete one, analog value has additional range convert (also called linear convert) function.

Table 8 Input Output Configuration Parameter Description

Index	Parameter Name	Data Type	Description
24	SCALE_LOC_IN1	DS-256	Analog input 1 configuration
26	SCALE_LOC_IN2	DS-256	Analog input 2 configuration
28	SCALE_LOC_IN3	DS-256	Analog input 3 configuration
30	SCALE_LOC_IN4	DS-256	Analog input 4 configuration
32	SCALE_LOC_ OUT1	DS-256	Analog output 1 configuration
34	SCALE_LOC_ OUT2	DS-256	Analog output 2 configuration
36	SCALE_LOC_ OUT3	DS-256	Analog output 3 configuration
38	SCALE_LOC_ OUT4	DS-256	Analog output 4 configuration
40	LOC_IN_D1	DS-257	Discrete input 1 configuration
42	LOC_IN_D2	DS-257	Discrete input 2 configuration
44	LOC_IN_D3	DS-257	Discrete input 3 configuration
46	LOC_IN_D4	DS-257	Discrete input 4 configuration
48	MOD_OUT_D1	DS-257	Discrete output 1 configuration
50	MOD_OUT_D2	DS-257	Discrete output 2 configuration
52	MOD_OUT_D3	DS-257	Discrete output 3 configuration
54	MOD_OUT_D4	DS-257	Discrete output 4 configuration

4.3.4.1 MOD_SCALE_LOC_PARM Analog Input Output Configuration Parameter Structure (DS-256)

The new added data type DS-256 is configuration parameter for analog input output, it can carry out the conversion between PA float data and Modbus register data. DATA_TYPE data type parameter indicates the Modbus register data type, and it does linearity conversion to Modbus register data and gives PA float data or converts PA float data to DATA_TYPE indicated data and writes into Modbus register via FROM_EU100, FROM_EU0,TO_EU100 and TO_EU0.

Table 9 DS-256 Data Member Description

Data Member	Data Type	Function Description
FROM_EU100	FLOAT	Upper limit for input range
FROM_EU0	FLOAT	Lower limit for input range
TO_EU100	FLOAT	Upper limit for output range
TO_EU0	FLOAT	Lower limit for output range
DATA_TYPE	USIGN8	Data type parameter, please refer to Table 10 DATA_TYPE parameter description for details.
SLAVE_ADDRESS	USIGN8	Modbus slave address, range 0-255
FUNCTION_CODE	USIGN8	Modbus function code indicates which function code is communication with the command. Please refer to Table 13 FUNCTION_CODE parameter description for details.
REGISTER_ADR_OF_VALUE	USIGN16	Modbus register address related to analog parameter value
REGISTER_ADR_OF_STATUS	USIGN16	Modbus register address related to analog parameter quality status

4.3.4.1.1 DATA_TYPE Format Description

Table 10 DATA_TYPE Parameter Description

Index	Name	Data Type	Data Length	Effective Range	Others
1	Float_0123	Single precision float	4		Only analog input output parameter supported
2	Float_1032	Single precision float	4		Only analog input output parameter supported
3	Float_3210	Single precision float	4		Only analog input output parameter supported
4	Float_2301	Single	4		Only analog

		precision float			input output parameter supported
5	Unsigned8_0	Unsigned int	1	0-255	
6	Unsigned8_1	Unsigned int	1	0-255	
7	Unsigned16_01	Unsigned short int	2	0-65535	Only analog input output parameter supported
8	Unsigned16_10	Unsigned short int	2	0-65535	Only analog input output parameter supported
9	Unsigned32_0123	Unsigned long int	4	0-4294967295	Only analog input output parameter supported
10	Unsigned32_1032	Unsigned long int	4	0-4294967295	Only analog input output parameter supported
11	Unsigned32_3210	Unsigned long int	4	0-4294967295	Only analog input output parameter supported
12	Unsigned32_2301	Unsigned long int	4	0-4294967295	Only analog input output parameter supported
13	Signed8_0	Signed int	1	-128-127	
14	Signed8_1	Signed int	1	-128-127	
15	Signed16_01	Signed short int	2	-32768-32767	Only analog input output parameter supported

16	Signed16_10	Signed short int	2	-32768-32767	Only analog input output parameter supported
17	Signed32_0123	Signed long int	4	-2,147,483,648-2,147,483,647	Only analog input output parameter supported
18	Signed32_1032	Signed long int	4	-2,147,483,648-2,147,483,647	Only analog input output parameter supported
19	Signed32_3210	Signed long int	4	-2,147,483,648-2,147,483,647	Only analog input output parameter supported
20	Signed32_2301	Signed long int	4	-2,147,483,648-2,147,483,647	Only analog input output parameter supported

The suffix of DataType_abcd appearing in the data type table above, abcd means the data's serial number in Modbus slave. 0 represents the low 8 bits of data in the first register, 1 represents the high 8 bits of data in the first register, 2 represents the low 8 bits of data in the second register, 3 represents the high 8 bits of data in the second register. The gateway uses small end mode, Unsigned32_0123 represents that register data gives value to long int variable in the gateway in original order, and Unsigned32_1032 represents Modbus slave register data after high and low bit bytes exchange gives value to long int variable in the gateway.

4.3.4.1.2 Parameter Quality Status and REGISTER_ADR_OF_STATUS

When REGISTER_ADR_OF_STATUS is 0 (default), it represents it is an invalid register address. Otherwise it is a valid one.

Table 11 Parameter Quality Status and REGISTER_ADR_OF_STATUS

Parameter	REGISTER_ADR_OF_STATUS Configuration Invalid (default)	REGISTER_ADR_OF_STATUS Configuration Valid
AI/DI	If Modbus communicates normally, the parameter quality status "GOOD NON-CASCADE", if not, it's "BAD NO COMMUNICATION WITH LAST	Transducer blocks communicate via Modbus and read related address data from MODBUS slave station, among which the lower 8 bits are

	VALUE”.	taken as parameter’s quality condition, and higher 8 bits are ignored.
AO/DO	Transducer blocks will not send any parameter status data to Modbus slave via Modbus.	Transducer blocks send data to instrument board related address register via Modbus, and parameter quality status will occupy register data lower 8 bits, with higher 8 bits set as 0.

4.3.4.2 MOD_SCALE_LOC_PARM Discrete Input and Output Configuration Parameter Structure (DS-257)

This newly added data type DS-257 is discrete nput and output configuration parameter, which can realize the transition of PA discrete data and Modbus register data. Data type DATA_TYPE only suggests Unsigned8_0 and Unsigned8_1 type. For Usigned8_0 type, lower eight-bit bytes related to PA discrete parameter, and for Unsigned8_1 type, higher eight-bit bytes related to PA discrete parameter.

Table 12 DS-257 Data Member Description

Data Member	Data Type	Function description
DATA_TYPE	USIGN8	Data type parameter. Refer to Table 10 DATA_TYPE parameter description for details.
SLAVE_ADDRESS	USIGN8	Modbus slave address, range 0-255.
FUNCTION_CODE	USIGN8	Modbus function code, indicating which function code should this command use to communicate. Refer to Table 11 FUNCTION_CODE parameter description for details.
REGISTER_ADR_OF_VALUE	USIGN16	Modbus register address related to discrete parameter value
REGISTER_ADR_OF_STATUS	USIGN16	Modbus register address related to discrete parameter quality status. Note: The address setting is invalid if the command is read-write coil

4.3.4.3 FUNCTION_CODE Parameter

Table 13 FUNCTION_CODE Parameter Description

Function	Name	Others

code		
0	No Command	Default value
1	FC01 Read Coils	Only discrete input supported
2	FC02 Read Discrete Input	Only discrete input supported
3	FC03 Read Holding Register	Analog input, discrete input supported
4	FC04 Read Input Register	Analog input, discrete input supported
5	FC05 Write Single Coils	Only discrete output supported
6	FC06 Write Single Register	Analog output, discrete output supported
16	FC16 Write Multiple Register	Only discrete output supported

4.4 Set Gateway Address

There are 2 ways to set gateway address: Software setting and hardware setting.

4.4.1 Software Setting Address

First, the user is requested to set 4th special function interface as OFF, and then to set address via software. After that, the user shall restart the device (connect PA bus again), and then modify gateway address by sending Set_Address service via any master.

4.4.2 Hardware Setting Address

First, the user is requested to set 4th special function interface as ON, and then to set address via hardware. After that, the user shall restart the device (connect PA bus again), and then modify gateway address by 2 DIP switches in the front panel of gateway.

4.5 Modbus Setting Example

The user shall user Siemens PDM software to configure the gateway, and Microcyber provides EDD file for the gateway device. The user shall use EDD file to Siemens PDM software to complete the configuration.

Following is the operation steps after the EDD file is in Siemens PDM software correctly.

4.5.1 Modbus Communication Parameter Setting

Choose Device->Modbus Configuration->Modbus Communication Setting, to get the following image:

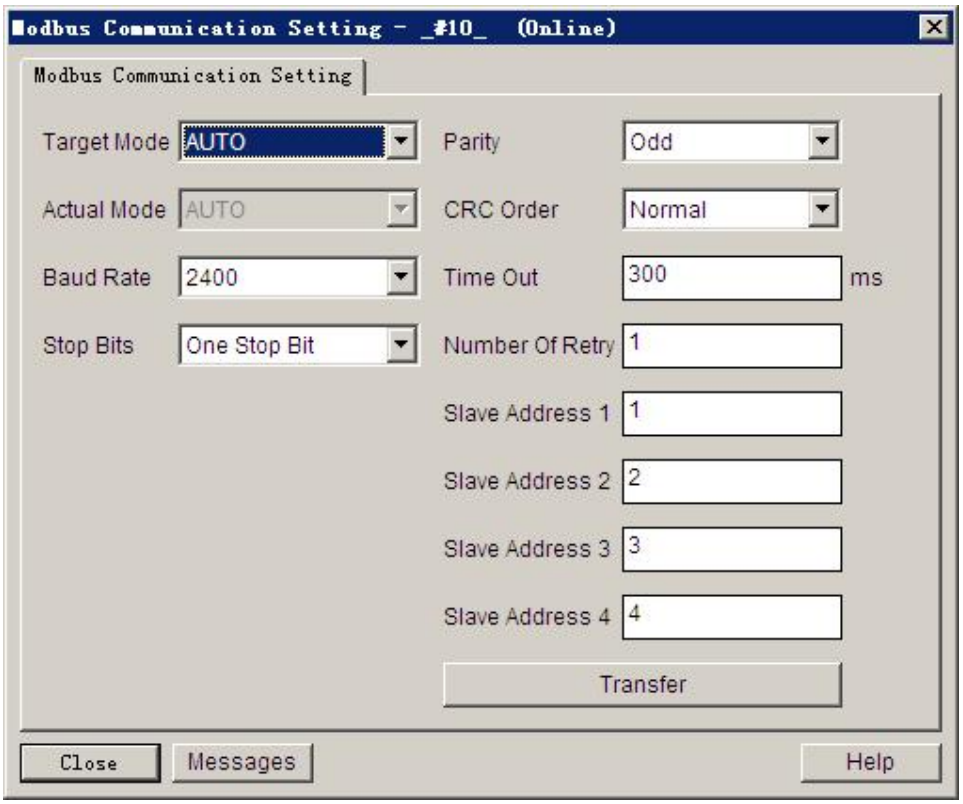

Figure 9 Modbus Communication Parameter Setting

Here shall the user modify Modbus bus' baud rate, stop bit, parity bit, Modbus CRC13, responding overtime of each Modbus command, number of retries and 4 Modbus slave addresses at most.

Note: Here shall the user set 4 Modbus slave addresses at most, and doesn't set which device reads registers. If certain address doesn't set register, it won't send any command to the address.

Slave Address 1 is in charge of analogy input 1, analogy output 1, discrete input 1 and discrete output 1.

Slave Address 2 is in charge of analogy input 2, analogy output 2, discrete input 2 and discrete output 2.

4.5.2 Modbus Register Parameter Setting

Choose Device->Modbus Configuration, and there are 4 sub lists: Modbus Analog Input, Modbus Analog Output, Modbus Discrete Input and Modbus Discrete Output, each one includes 4 input/output items.

Take Modbus Analog Input as an example, including 4 analogy input, let's introduce how to configure the 1st analogy input:

Choose Device->Modbus Configuration->Modbus Analog Input list to enter Modbus Mod In 1 list, shown as following:

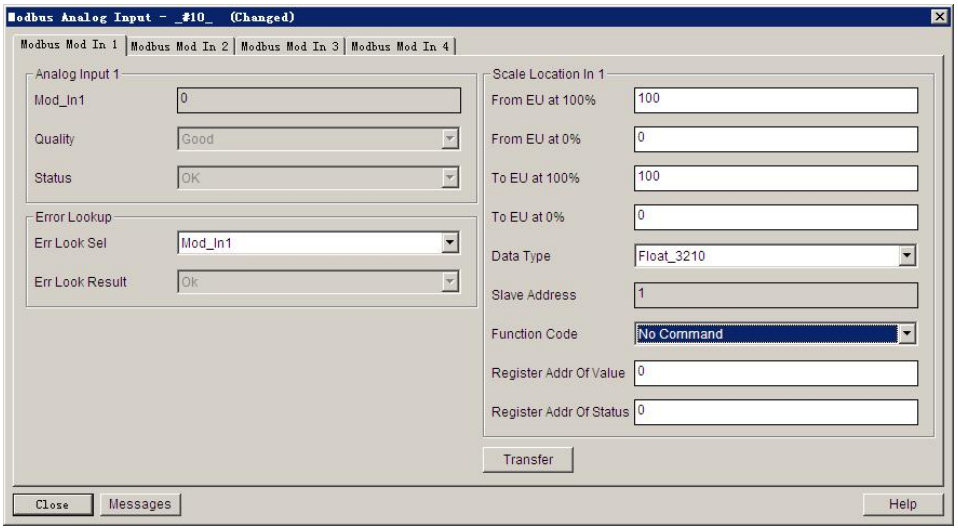

Figure 10 Modbus Analog Input 1 Register Parameter Setting

Shown as figure above, the interface includes 3 parts: Analog input value 1 and its quality status, error check and Analog input value 1's configuration.

It is similar with this, for the rest analog input output and discrete input output.

Among them, value and its quality status is read-only, and the user may check the Modbus upload data is correct in this part.

Error check can be configured, and it can be set as 16 Modbus data (4 AIs, 4 AOs, 4 DIs and 4 DOs), and the user shall check the status.

For the configuration part, the user can set present value's input and output range, data type, function code and register address, etc.

Note: The register address set bu the gateway is the real one, and it is not the polling address.

The register address related to the status, if the user cannnot upload status value according to PA specification, it is not suggeted. It is suggested it should be set as 0.

The Slave Address here is read-only, the user shall modify at Modbus communication parameter setting if there is any modification.

4.6 Gateway Periodic Configuration

4.6.1 GSD File Introduction

Profibus network master carries out device initialization process via GSD file. GSD file includes software revision, hardware revision, bus baud rate, periodic data exchange, etc. The gateway supports 2 GSD files, manufacture's GSD file and specification GSD file. Here is the mainly introduction for manufacture's GSD file.

16 function blocks included in the gateway can do periodic data exchange service with 1 Class master. The user shall configure the function blocks.

Table 14 GSD Module

Function Block	Module Name	Module No.	Configuration Data
Vacant Module	EMPTY_MODULE	1	0x00
AI Function Block	Analog Input (AI)	2	0x42,0x84,0x08,0x05
AO Function Block	SP	3	0x82,0x84,0x08,0x05
	SP+READBACK+POS_D	4	0xC6, 0x84, 0x86, 0x08, 0x05, 0x08, 0x05, 0x05, 0x05
	SP+CHECKBACK	5	0xC3, 0x84, 0x82, 0x08, 0x05, 0x0A
	SP+READBACK+POS_D+CHECKBACK	6	0xC7, 0x84, 0x89, 0x08, 0x05, 0x08, 0x05, 0x05, 0x05, 0x0A
	RC_IN+RC_OUT	7	0xC4, 0x84, 0x84, 0x08, 0x05, 0x08, 0x05
	RC_IN+RC_OUT+CHECKBACK	8	0xC5, 0x84, 0x87, 0x08, 0x05, 0x08, 0x05, 0x0A
	SP+RC_IN+RB+RC_OUT+POS_D+CB	9	0xCB, 0x89, 0x8E, 0x08, 0x05, 0x08, 0x05, 0x08, 0x05, 0x08, 0x05, 0x05, 0x05, 0x0A
DI Function Block	OUT_D	10	0x91
DO Function Block	SP_D	11	0xA1
	SP_D+RB_D	12	0xC1, 0x81, 0x81, 0x83
	SP_D+CB_D	13	0xC1, 0x81, 0x82,

			0x92
	SP_D+RB_D+CB_D	14	0xC1, 0x81, 0x84, 0x93
	RC_IN_D+RC_OUT_D	15	0xC1, 0x81, 0x81, 0x8C
	RC_IN_D+RC_OUT_D+CB_D	16	0xC1, 0x81, 0x84, 0x9C
	SP_D+RC_IN_D+RB_D+RC_OUT_D+CB_D	17	0xC1, 0x83, 0x86, 0x9F

Note: RB=READBACK, CB=CHECKBACK, RC_OUT=RCAS_OUT, RC_IN=RCAS_IN

Each function block occupies a slot, and each slot can be chosen by multiple modules.

Table 15 GSD Input Output Data Configuration List

Slot No.	Function Block	Default Module	Selective Module
1	AI Function Block 1	2	1,2
2	AI Function Block 2	2	1,2
3	AI Function Block 3	2	1,2
4	AI Function Block 4	2	1,2
5	AO Function Block 1	3	1,3,4,5,6,7,8,9
6	AO Function Block 2	3	1,3,4,5,6,7,8,9
7	AO Function Block 3	3	1,3,4,5,6,7,8,9
8	AO Function Block 4	3	1,3,4,5,6,7,8,9
9	DI Function Block 1	10	1,10
10	DI Function Block 2	10	1,10
11	DI Function Block 3	10	1,10
12	DI Function Block 4	10	1,10
13	DO Function Block 1	11	1,11,12,13,14,15,16,17
14	DO Function Block 2	11	1,11,12,13,14,15,16,17
15	DO Function Block 3	11	1,11,12,13,14,15,16,17
16	DO Function Block 4	11	1,11,12,13,14,15,16,17

4.6.2 Install GSD File

Take Siemens STEP 7 Software as an example, choose any project, open hardware configuration, choose “Options→Install GSD File…”, and it will open the GSD file window.

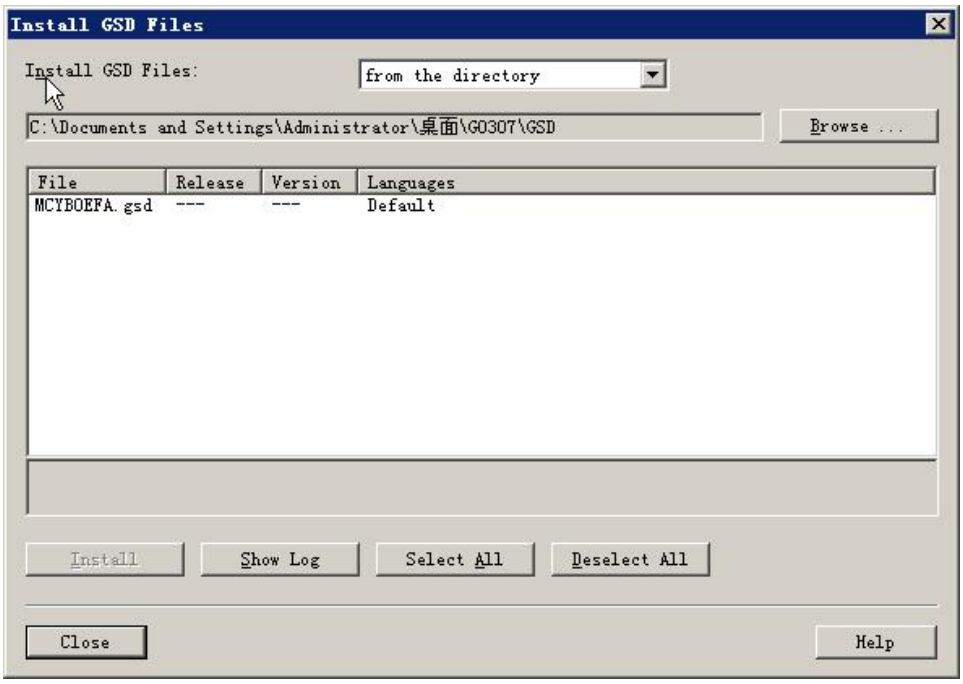

Figure 11 GSD File Window

Click “Browse…” and choose the path for GSD file. It will list all the GSD files in the present path, choose the GSD file and click “Install”. Keep clicking “Yes”, until Figure 13 is shown.

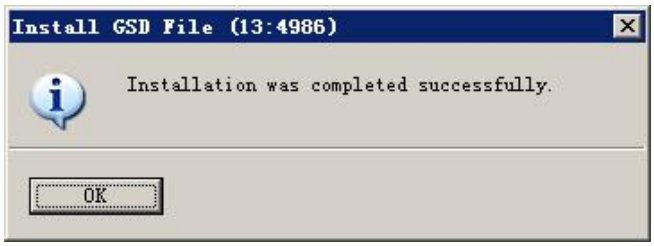

Figure 12 Successful Installation

4.6.3 Use GSD File

After successful installation for GSD, the gateway shall appear in the tree list at the right side of the hardware configuration window.

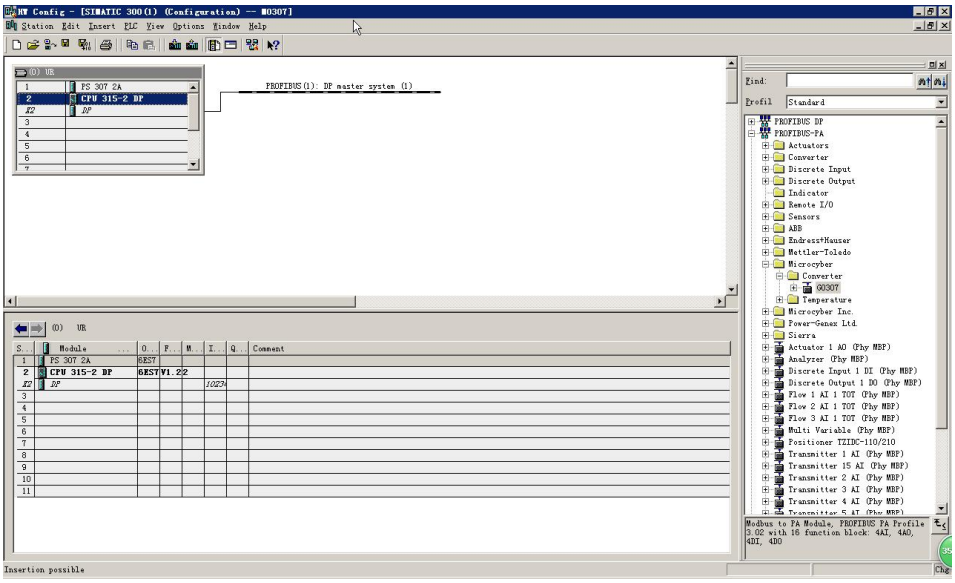

Figure 13 Correct Installed Devices

Drag gateway to DP bus, and it will show the prosperities window automatically. Here shall the user configure the requested address, and we choose address 85.

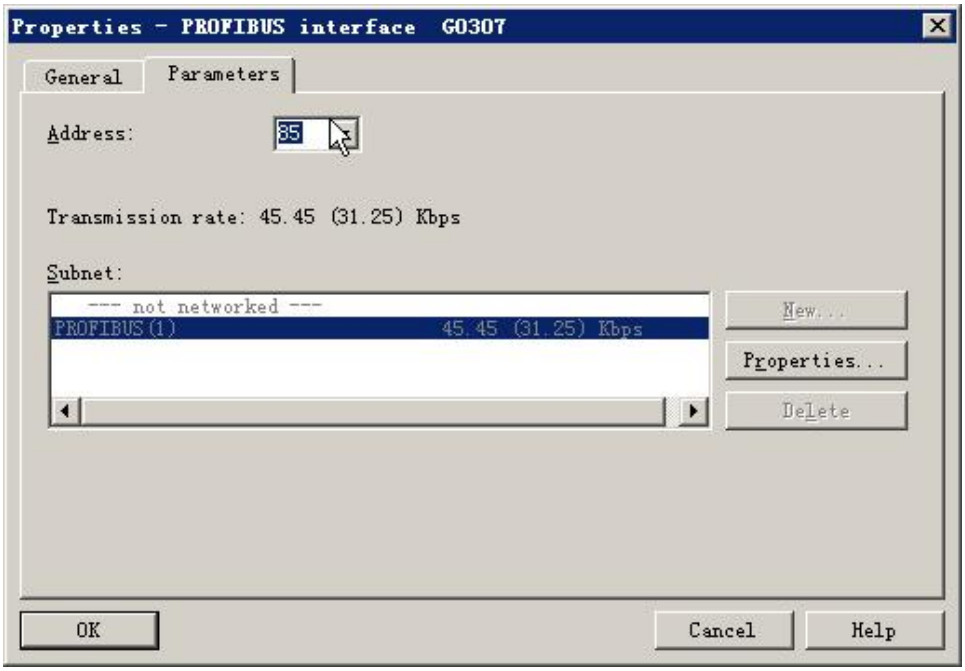

Figure 14 Device Prosperities Configuration

Click “OK” to finish adding gateway.

Choose the gateway in the configuration image, the device’s configuration shall be shown in the left bottom side of the window, shown as following.

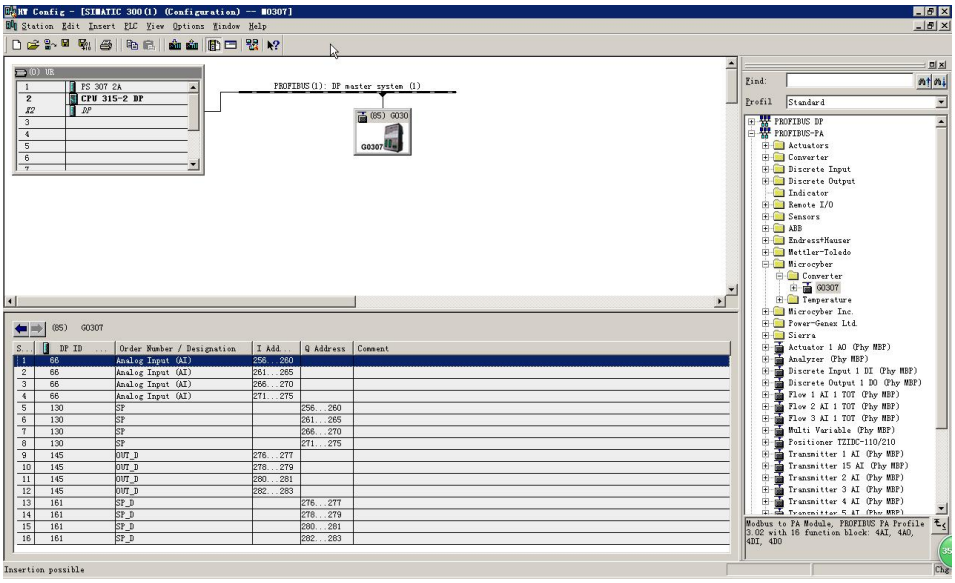

Figure 15 Device Configuration

In the hardware configuration, the configuration shall do related modify according to specific request, in order to form configuration information of gateway's input output data. The detailed introduction for each module is mentioned in 4.6.1.

4.6.4 Specification GSD File

Except the GSD file resigned by the gateway, the user shall use the specification GSD file: pa139760.gsd.

Because each slot for the module is ready (refer to Table 15), only when the configuration is right, the device shall work in normal.

Section 5 Maintenance

- Simple maintenance

Table 16 LED Light Status

LED Indicating Light	Color	Normal	Abnormal	Reason	Solution
Power	Green	On	Off	Power failure	Check power and connection
				Internal failure	Contact technical support
				Configuration failure	Check hardware configuration abnormal or no configuration
Online	Yellow	On	Off	Address error	Check hardware set address is enabled or not, and if the address matches with configuration
				Power failure	Check PA bus is powered or not
				Internal failure	Contact technical support
				Configuration failure	Check hardware configuration abnormal or no configuration
Offline	Red	Off	On	Address error	Check hardware set address is enabled or not, and if the address matches with configuration
				Power failure	Check PA bus is powered or not
				Internal failure	Contact technical support
TxD	Green	Flicker	Off	No connection with slave	Connect with slave correctly

RxD	Yellow	Flicker	Off	Configuration failure	Check transducer block is configured correctly or not
				Power failure	Check power and connection
				Internal failure	Contact technical support
				No connection with slave	Connect with slave correctly
				Configuration failure	Check transducer block is configured correctly or not
				Power failure	Check power and connection
				Internal failure	Contact technical support

- Daily maintenance is only for device cleansing.
- Failure maintenance: Please return to factory if there is failure.

Section 6 Technical Specification

6.1 Basic Parameter

Bus Power	9~32VDC
Modbus Power	24VDC(±20%)
Current Consumption	≤ 14mA
Working Temperature	-20℃~70℃
Storage Temperature	-40℃~70℃
Humility Range	5%~95%RH
Modbus Physical Interface	RS485 (configurable end) / RS232

6.2 Performance Index

Protection Level	IP20 for housing
EMC	GB/T 18268.1-2010 GB/T 18268.23-2010

6.3 Physical Characteristic

Weight	0.2kg
Structure Material	Housing: ABS; Clip: POM Coating: Polyester epoxy resin

6.4 Default Communication Parameter

Slave Address	1, 2, 3, 4
Baud Rate	9600
Data Bit	8
Stop Bit	1
Check	No check
CRC Check	High byte is ahead

6.5 Supportive Modbus Function Code

1	Read coils
2	Read discrete inputs
3	Read holding registers
4	Read input registers
5	Write single coil
6	Write single register
16	Write multiple registers values

Appendix G0307 Modbus to PA Gateway Selection

GW-MODB-PA	G0307 Modbus to PA Gateway	
	Code	Modbus Physical Interface
	RS485	RS485 Interface
	RS232	RS232 Interface

GW-MODB-PA - RS485 ——Selection Example

MICROCYBER

YOUR FIELDBUS EXPERT

CONTACT INFORMATION

Address: 17-8 Wensu Street, Hunnan New District, Shenyang, China

Website: www.microcyber-fieldbus.com

Phone: +86-24-31217278/+86-24-31217280

Fax: +86-24-31217338

Email: guo.ruibing@microcyber.cn